NT-Project Ing. Tabacchi Omar info@ntproject.com
http://www.ntproject.com

PRESENTATION SOFTWARE KART ANALYSIS

When opening the software appears this screenshot:

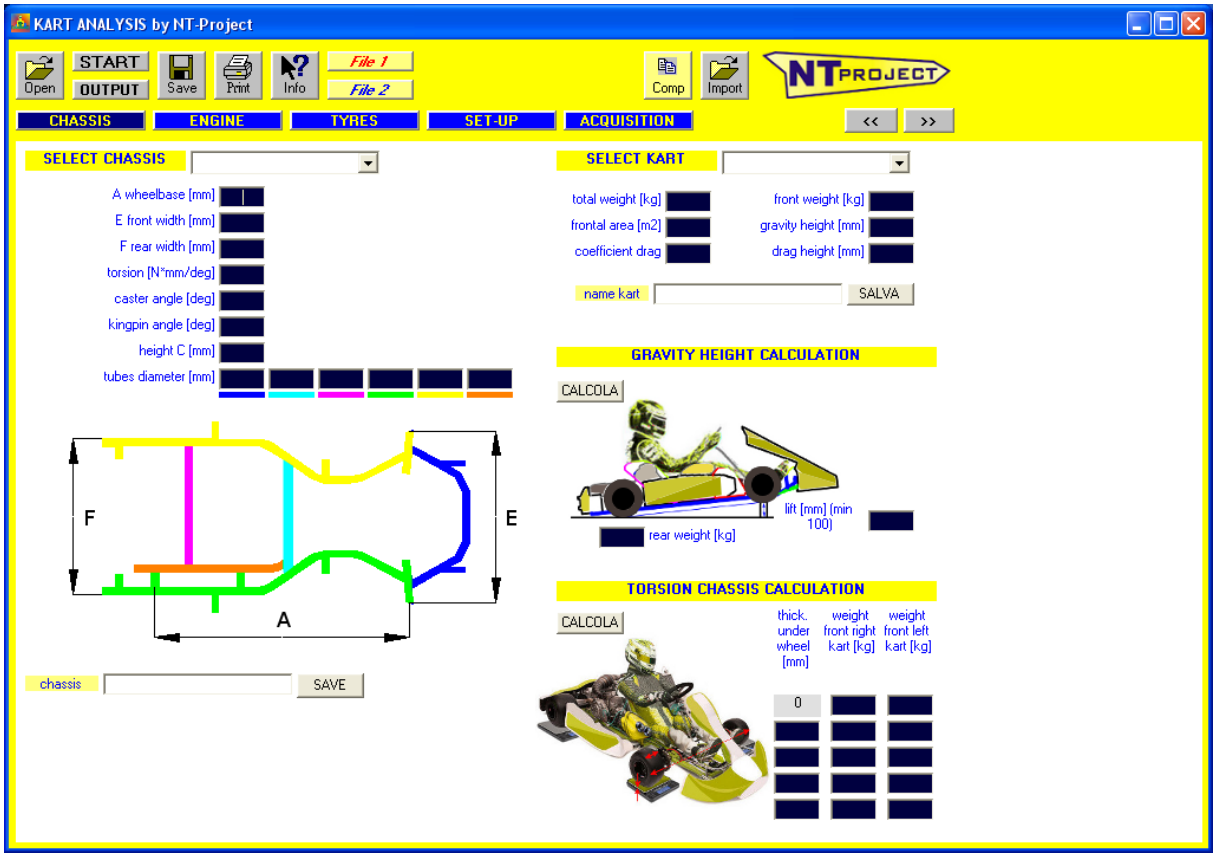

This screen already identified one of the five data entry tabs, in the specific case of that relating to CHASSIS.

The other tabs are accessed from the buttons following.

Now let's see in detail the data to be placed on each tab, starting from that of CHASSIS and appearing at the opening.

data entry

CHASSIS TAB

For first you must enter the kart chassis data

The data can be easily entered selecting your chassis from the list (in the list there are all the chassis homologated CIK-FIA with avalaible the homologation fiche)

However if you have a chassis not listed, or modified, you can enter the data manually.

The information requested is related to the **geometry** of the kart, go indeed include the measures in mm of the units present in the picture:

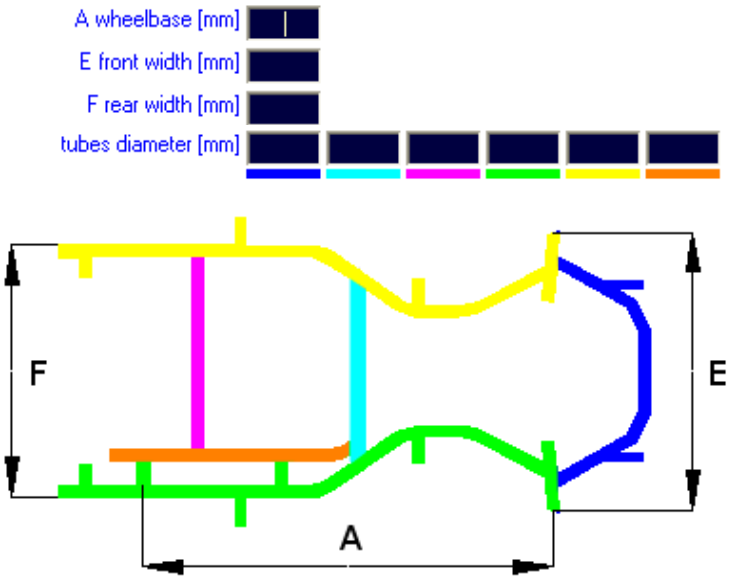

In addition to these data you must enter:

- torsion [N*mm/deg] → this value is determined experimentally, for the test procedure please contact NT-Project, or you can use the value 180000 which is very common in today's kart frames;
- caster angle [deg] → the value should be measured directly according to the inclination of C to the vertical axis of the wheel, watching the kart sideways (see figure below);
- kingpin angle [deg] → the value should be measured directly according to the inclination of C to the vertical axis of the wheel, watching the kart frontally (see figure below);

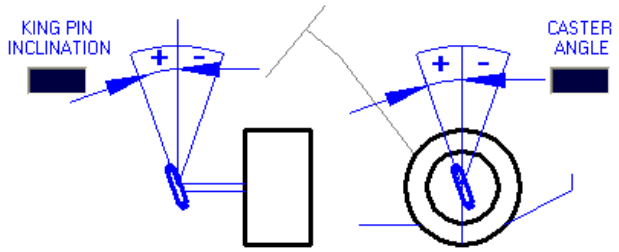

- height C [mm] → the value should be measured by the average value between the external and the internal height of the C;

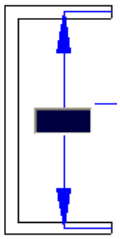

To experimentally calculate the value of the torsion of the chassis, the following procedure must be carried out, and the utility present in the software for the calculation must be used

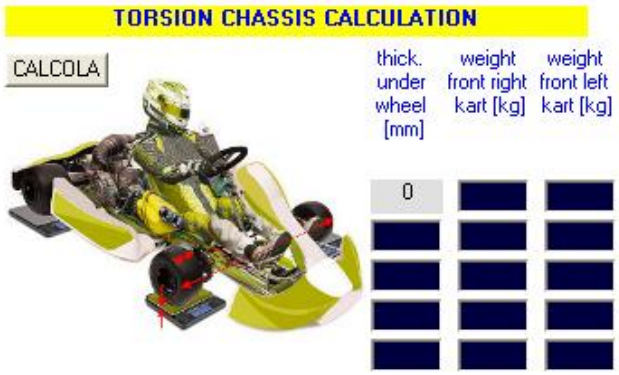

- to enter in the software the data of the front width and of the rim width
- position the kart with the driver on 4 scales or on 2 scales under the front wheels and 2 shims of equivalent height of the scales under the rear wheels;
- detect the weights indicated by the scales under the wheel front right and under the front left wheel and insert them in the row with shim under wheel 0;
- keep the steering locked in an upright position and insert a shim under the right front wheel for example of 4-8-12-16 mm;
- detect the weights indicated by the scales under the wheel front right and under the front left wheel and insert them indicating the shim to which they refer;
- press CALCOLA and you will have the average torsional stiffness of your kart obtained from the test results

Then must be inserted the information of the **kart**

You can simply select the category and you'll have already the values more usuals for the category, anyway if your category there isn't or you want enter the data more precises for your case, you must enter:

- total weight [kg] → the value refers to the weight of the kart complete of all with engine mounted (with water, oil, and gasoline), and the driver;
- frontal area [mm2] → you can use the default value of 0.5784;
- coefficient drag → you can use the default value of 0.804;
- front weight [kg] → the value refers to the front weight of the kart complete of all with engine mounted (with water, oil, and gasoline), and the driver;
- gravity height [mm] → the value refers to the gravity height of the kart with driver on board;
- drag height [mm] → the value refers to the center of front fairings of the kart, usually you can enter the same value that you've found for the gravity height;

For the horizontal balance, you must simply to weigh the front of the kart with the driver on board. You need a scale, where you put only the front wheels.

To experimentally calculate the height of the center of gravity, the following procedure must be carried out, and the utility present in the calculation software must be used:

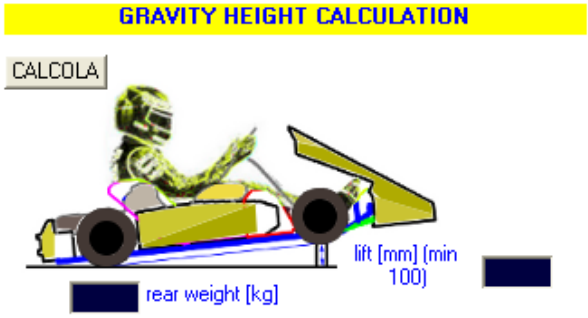

You must simply lift the front of the kart (with driver on board) minimum of 300 mm, and to weigh the rear weight. You need a scale, where you put only the rear wheels. At this point enter in the software the value that you've read on the scale, and the front height lift that you've used, and clicking on the button CALCOLA you'll have the gravity height that you must enter.

ENGINE

When you click the respective button you get the following screen:

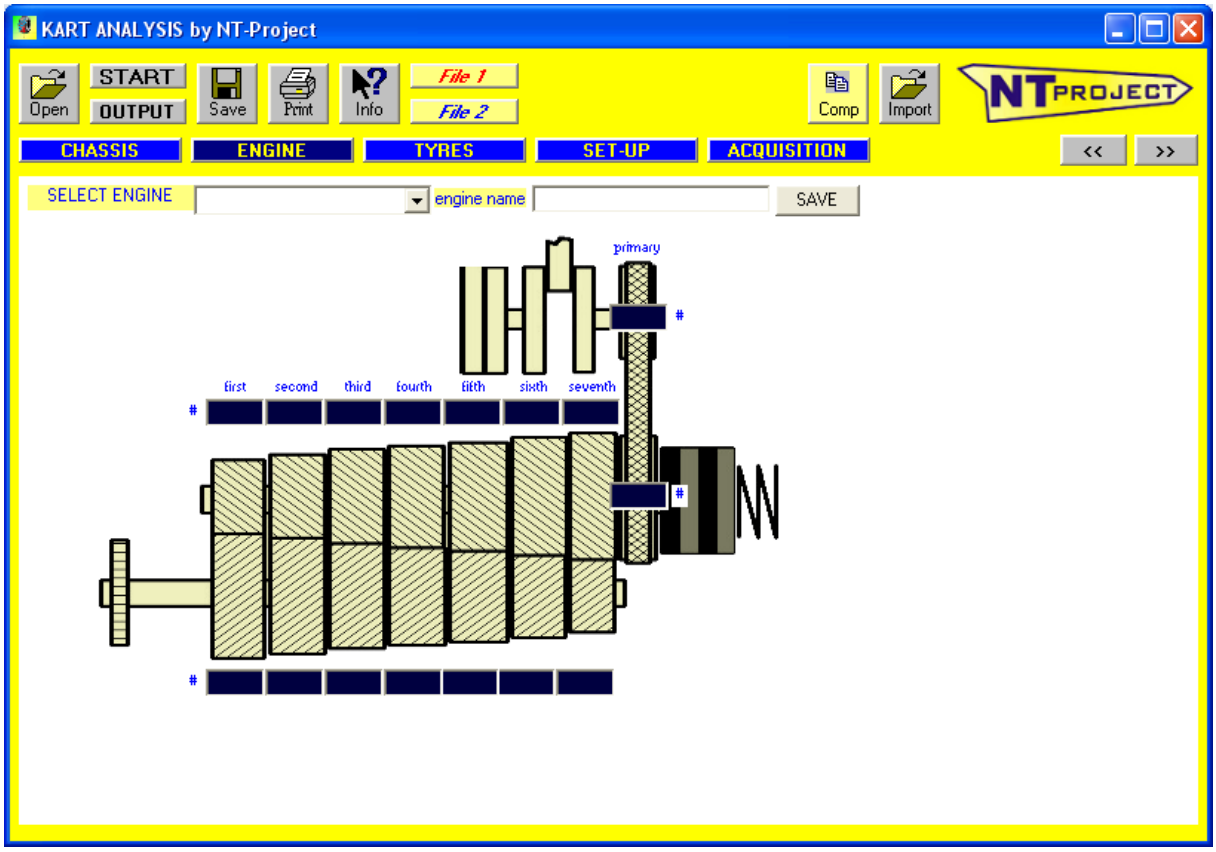

The data can be easily entered selecting your engine from the list (in the list there are all the engine homologated CIK-FIA with avalaible the homologation fiche)

However if you have an engine not listed, or modified, you can enter the data manually.

- numbers of teeth transmission primary gears;
- numbers of teeth gearbox gears;

In the case of single-speed engines, the symbolic value of 1 is inserted to the pair of primary drive gears, and the value 1 for the gears of the first gear pair

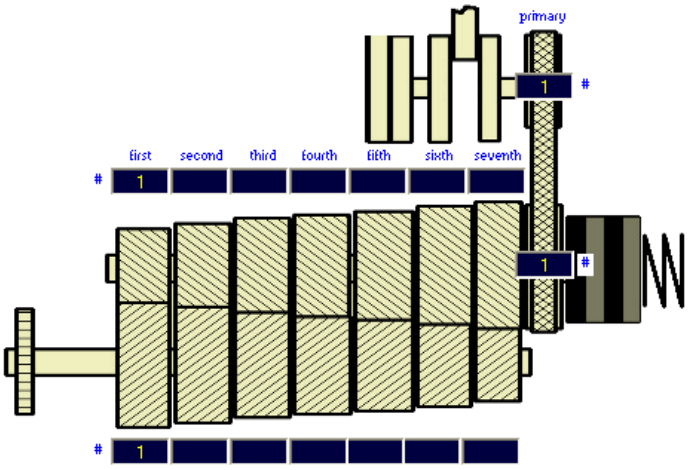

TYRES

When you click the respective button you get the following screen:

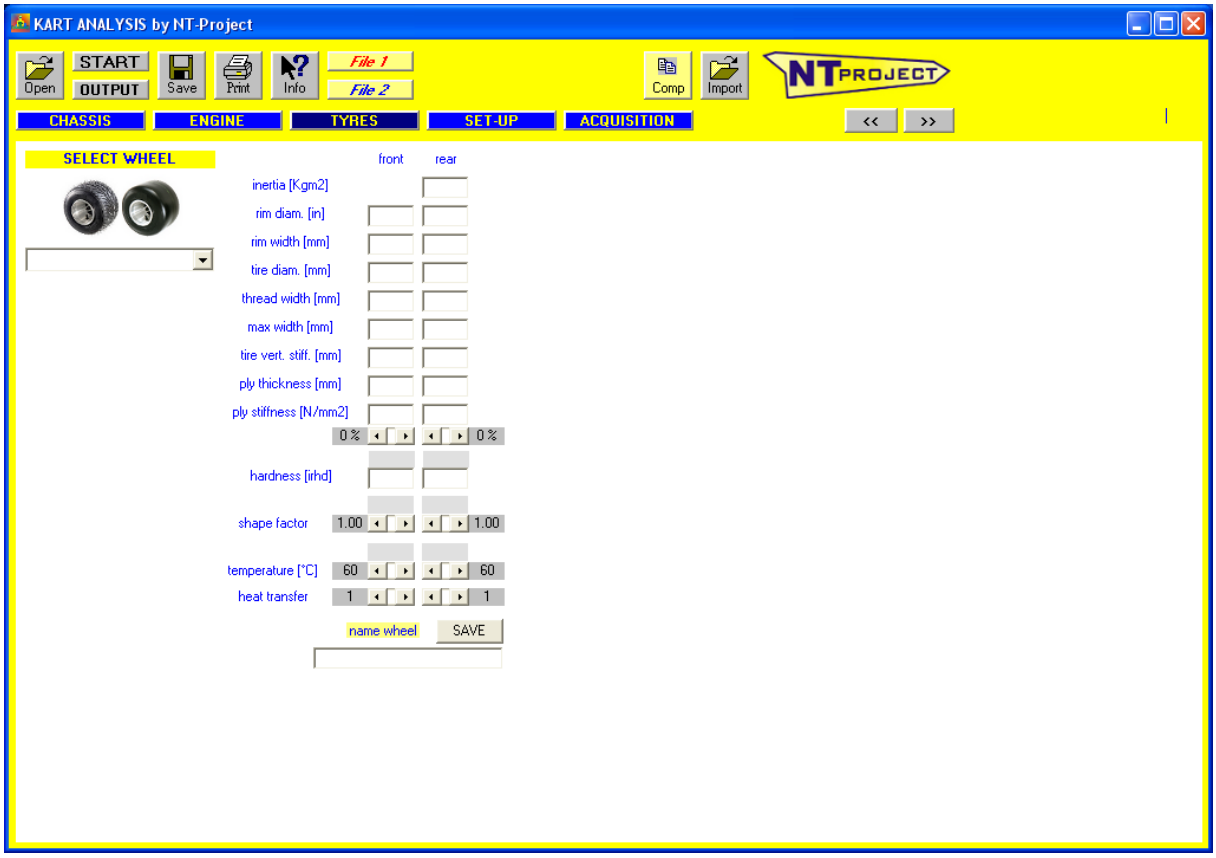

The data can be easily entered selecting your tyres from the list (in the list there are all the tyres homologated CIK-FIA with avalaible the homologation fiche)

However if you have a tyre not listed, or modified, you can enter the data manually.

The main data are all presents in the homologation fiche of the tyres

	front	rear
rim diam. [in]		
rim width [mm]		
tire diam. [mm]		
thread width [mm]		
max width [mm]		

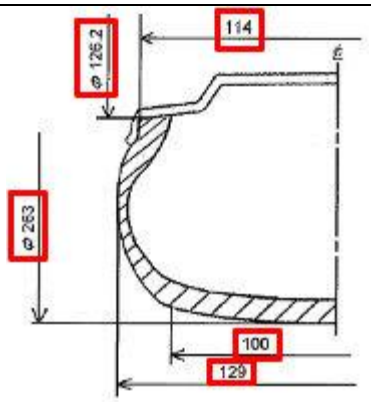

	front	rear
tire vert. stiff. [mm]		
hardness [irhd]		

7	Rigidité latérale et verticale (sous charge de 40 kg)	*Lateral and vertical spring stiffness (under load of 40 kg)*	2 – 17
18	Dureté superficielle de la bande de roulement (ISO 48/94)	*Superficial tread hardness (ISO 48/94)*	50 DIDC IRHD

ply thickness [mm]		
ply stiffness [N/mm2]		

Together at the dimensions and at the general features of the tyres, is of fundmental importance for the tyre behaviour to know the features of the carcass ply. In our tests we've determined the ply stiffness of all the main kart tyres, evaluating also as the stiffness change in function of the temperature, to see how happen to the tyre slip in the real operating conditions. If the data of the ply of your tyre aren't in the list, contact us providing the homologation fiche, so we'll give you its features of the ply.

Others data that can be managed are:

- wheel inertia [Kg*m2] → is the inertia of one rear wheel;
- shape factor → is a parameter very important because affects the optimal inflation pressure. If the value advised from the software is higher than the really optimal, you must move the factor towards 2, else towards 0;
- temperature → is a parameter very important because affects on the slip angle of the tire, if it's possible to measure the temperature of the front and rear tire at the end of the run, to set the bar to have the value corresponding the detected temperatures;
- heat transfer → is a parameter useful in the calculation of the tire temperatures, if the temperatures calculated are lower than those detected, decrease the value of the heat transfer;

SET-UP

When you click the respective button you get the following screen:

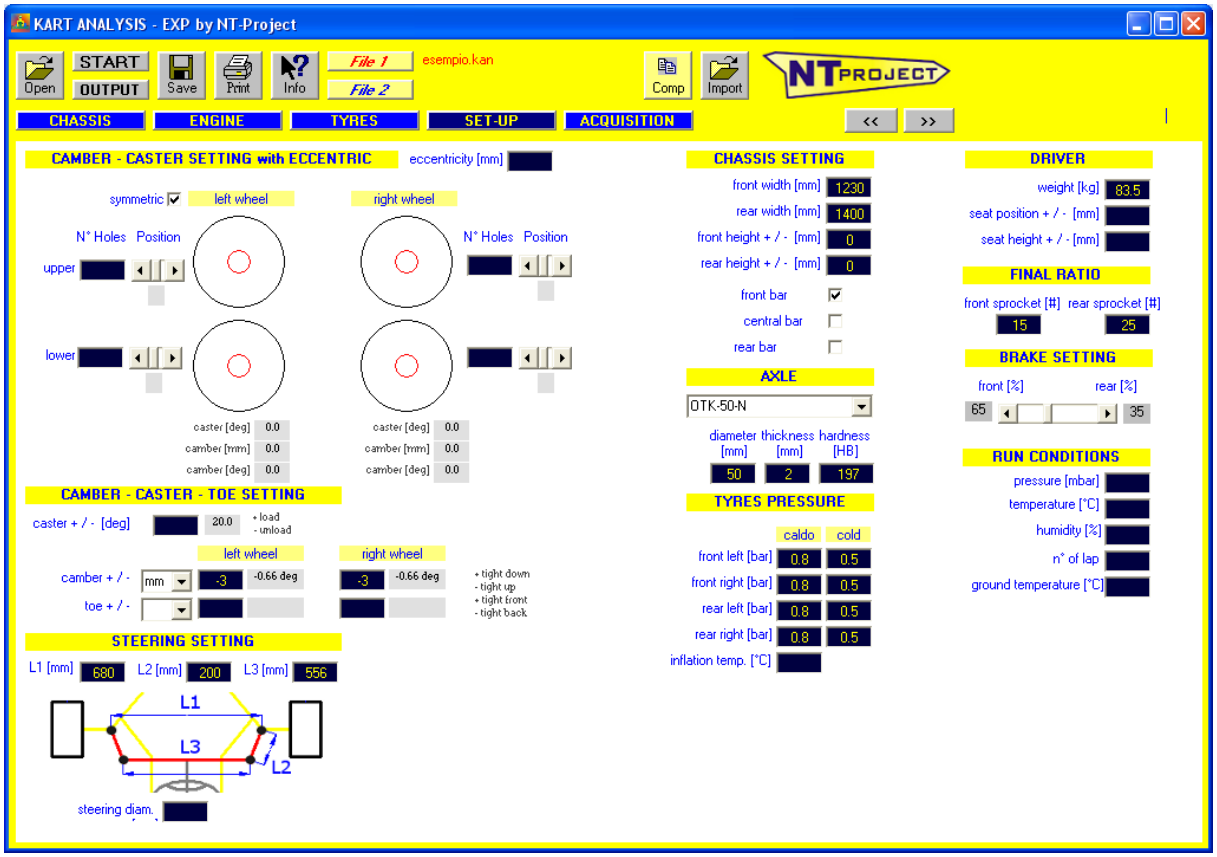

In this screen, you must enter the setup that you are using for your kart.

First you have to indicate the setting of camber, caster and toe that you are using. The software allows you to enter this data both if you use the eccentric for the regulation, both in case you use sniper or similar.

<u>Camber – Caster Setting with eccentric</u>

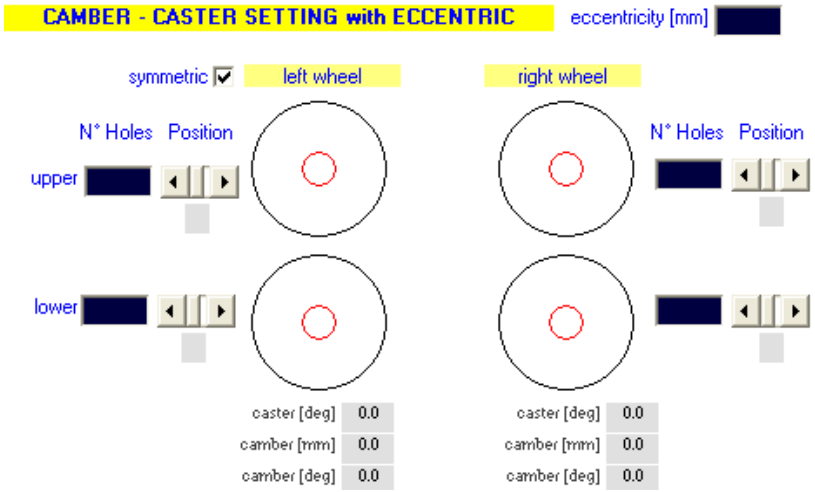

You can insert the data both in the case you use the eccentrics both above and below, both in the case it you use only one, and on the other side there is a bushing centered.

The data useful are the following:

- eccentricity [mm] → must be entered the eccentricity of the eccentric which is mounted, see figure below;

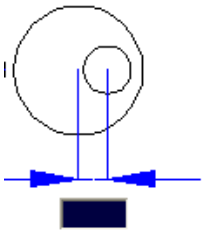

- N° Holes [mm] → must be inserted the value of the number of holes that presents the eccentric;
- Positions → moving the bars you can see how the eccentrics move always watching the kart from the top, and from the driver position. If you select the option symmetric moving the eccentrics of the left wheel come found automatically the positions corresponding for the right wheel.

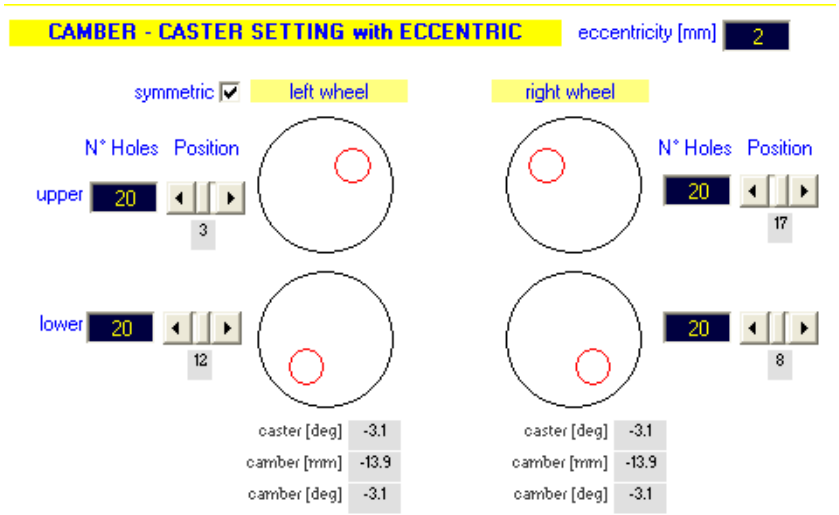

In addition to show the positions of the eccentrics, the software calculates how change the caster and camber of the two wheels.

For the camber, negative values mean that the wheel are tight up, for the caster positive values mean that the axle is more inclined towards the driver.

Camber – Caster with Parolin eccentrics

The Parolin frames also use an eccentric system to adjust the Camber and the Caster, but the displacement of the eccentric is free and not constrained by holes.

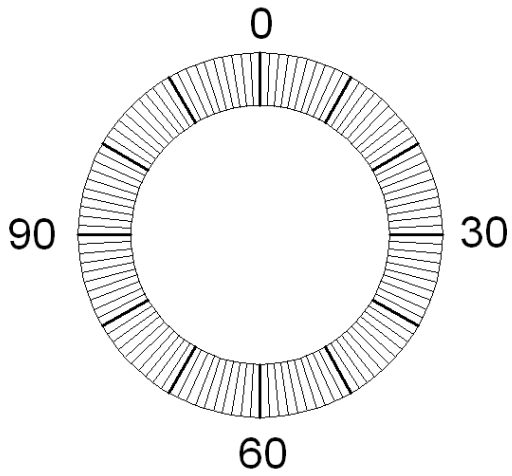

Camber – Caster Setting with SNIPER or EASY-CASTER-CAMBER

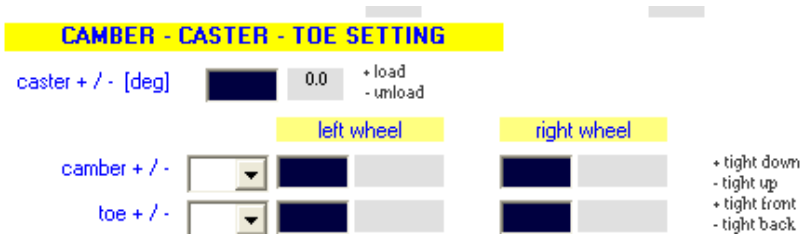

In this case you must directly enter the setting values that you are using:

- caster [deg] → must be entered the change in value of caster degrees to the neutral position, if at every notch sniper corresponds for example a displacement of the caster by 1 degree and loaded with 2 notches, you have to enter 2, but if you unload the 2 notches should enter -2;
- camber [mm or deg] → must be inserted the value indicating of how many mm or degrees the wheel is inclined towards the inside or towards the outside with respect to the vertical. To measure the values in mm must be measured the track at the ground and at the upper end, make the difference and divide by 2, if it is more closely down put a positive value, otherwise negative, see figure below.

(UP – DOWN) /2

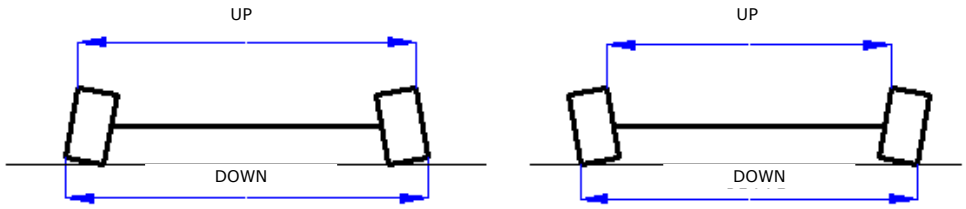

Sniper System

left front

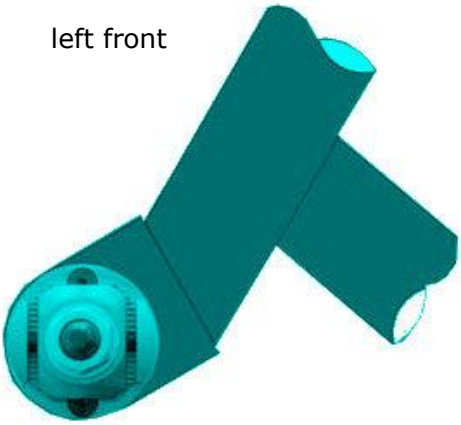

right front

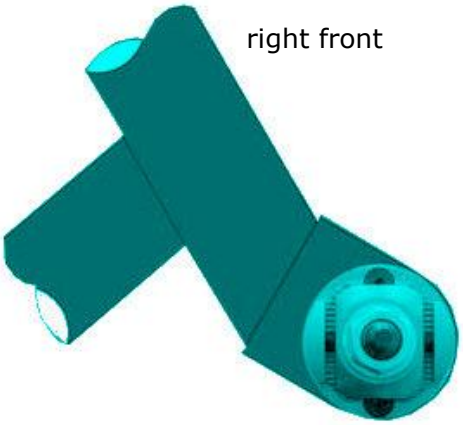

CAMBER ALL POSITIVE

CAMBER ALL NEGETIVE

CASTER ALL LOAD

CASTER ALL UNLOAD

Easy Caster Camber System

LEFT WHEEL

RIGHT WHEEL

CASTER SETTING

CASTER ALL LOAD

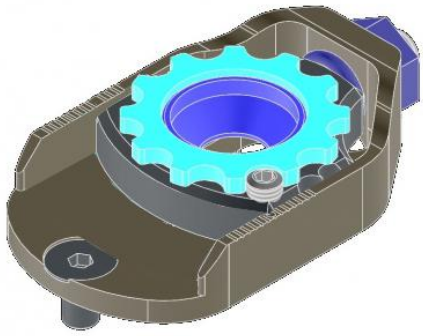

CASTER ALL UNLOAD

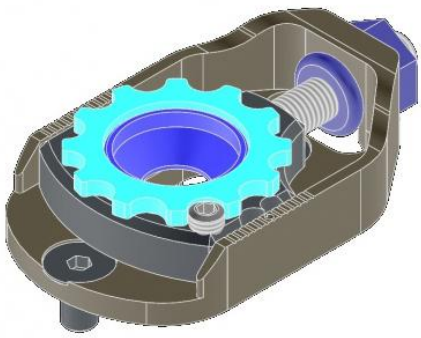

CAMBER SETTING LEFT FRONT WHEEL

CAMBER ALL NEGATIVE

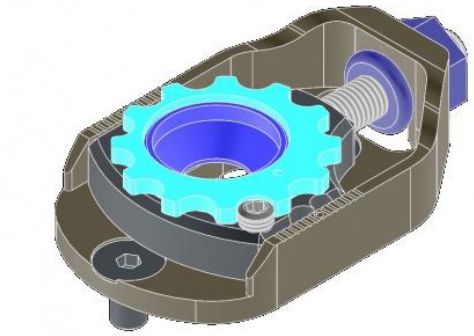

CAMBER ALL POSITIVE

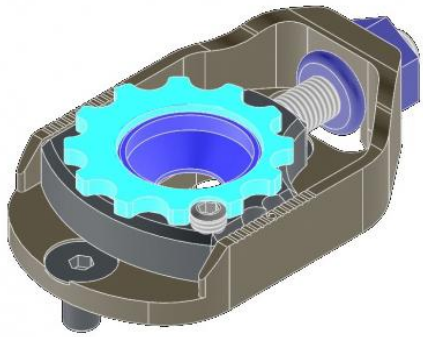

CAMBER SETTING RIGHT FRONT WHEEL

CAMBER ALL NEGATIVE

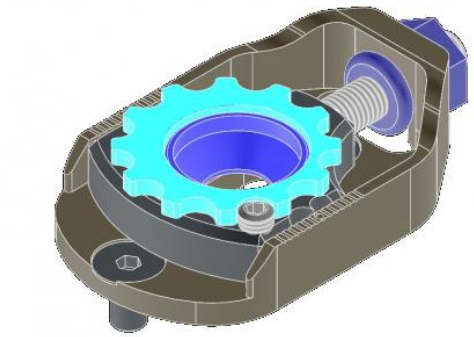

CAMBER ALL POSITIVE

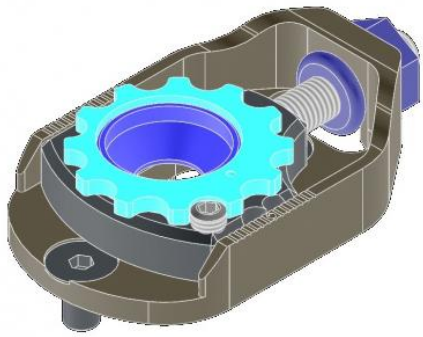

<u>Toe Setting</u>

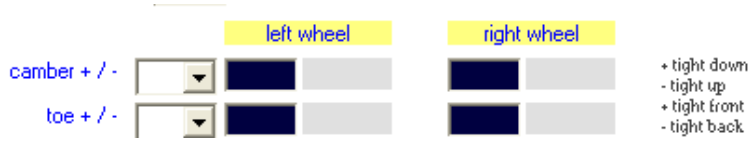

- toe [mm or deg] → must be inserted the value indicating of how many mm or degrees the wheel is inclined towards the inside or towards the outside with respect to the kart center. To measure the values in mm must be measured the track in front of the wheel and back the wheels, make the difference and divide by 2, if it is more closely in front put a positive value, otherwise negative, see figure below.

(BACK - FRONT) /2

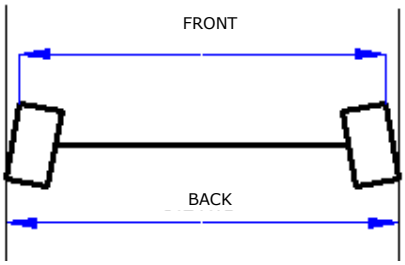

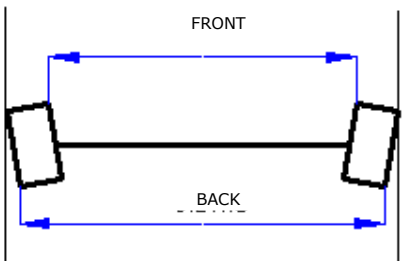

Steering Setting

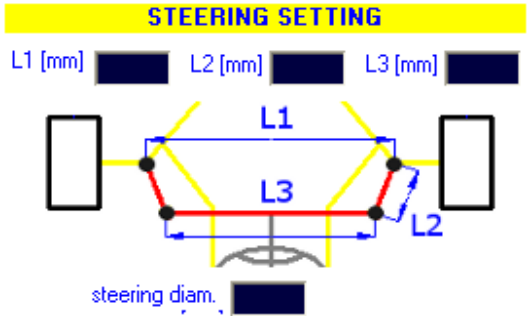

Must be inserted the dimensions of the quadrilateral that forms the steering mechanism:

- L1 [mm] -> it is the distance between the pivots of the wheels;
- L2 [mm] -> it is the length of the oblique arm that connects the wheel to the steering bar;
- L3 [mm] -> it is the distance measured horizontally between the two arms;

If you want, can be enetered also the steering wheel diameter, so you can have a precise calculation of the effort done from the driver in the driving, the default value is 230 mm

Chassis Setting

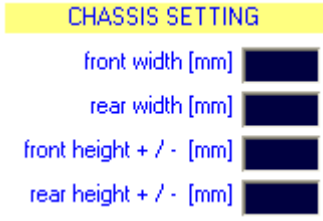

- front width [mm] → must be entered the value of the front track measured at ground level;
- rear width [mm] → va must be entered the value of the rear track measured at ground level;
- front height [mm] → if compared to the neutral position raise or lower the front kart you have to indicate the shift (positive values if you raise the kart, negative if lower);
- rear height [mm] → if compared to the neutral position raise or lower the kart to the rear you have to indicate the shift (positive values if you raise the kart, negative if lower);

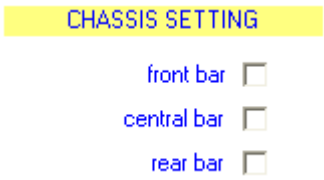

It must also indicate if you have some bar mounted in the frame (front, middle or back)

Axle

You must select from the list which axle have mounted, however, if your axle is special and is not listed, you can manually enter its characteristics:

- diameter [mm] → must be enter the external diameter of the axle;
- thickness [mm] → must be entered the thickness of the axle;
- elasticity [N/mm2] → if you don't know the value of the elasticity usually the values for steel tubes are in the range 170000 - 230000;

Driver

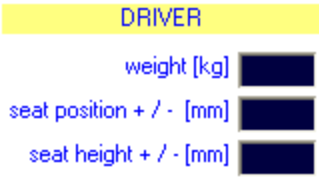

- weight [kg] → must be entered the weight of the driver;

If you've calculated the front weight of the kart, and the gravity height, with a position of the seat, and you move the seat from this point, you must enter the difference between the new position, and the position of the measurements.

- seat position + / - [mm] → if you move the seat in the direction of the front enter a positive value, if instead you move the seat in the direction of the rear, enter a negative value;

- seat position + / - [mm] → if you move the seat in the direction of the sky enter a positive value, if instead you move the seat in the direction of the ground, enter a negative value;

Tyres Pressure

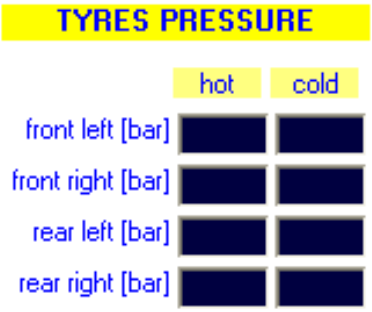

You must enter the tire cold pressure that you've used in the run, and the hot pressure at the run ending. If you can't measure the hot pressure, you can enter at first adding 0.3 bar at the cold pressure (for example cold 0.8 hot 1.1), and after to enter the values calculated from the software (see figure) and to repeat the calculation.

	Temperature [°C]				Pressure [bar]			
	FL	FR	RL	RR	FL	FR	RL	RR
LAP 1	27.2	27.2	30.7	30.4	0.51	0.51	0.51	0.51
LAP 2	35.8	35.2	48.4	45.0	0.53	0.53	0.55	0.55
LAP 3	40.6	39.6	58.8	53.5	0.54	0.54	0.59	0.58
LAP 4	43.5	42.4	65.5	59.1	0.56	0.55	0.62	0.61
LAP 5	45.4	44.1	70.0	62.8	0.56	0.56	0.64	0.62
LAP 6	46.6	45.2	73.1	65.4	0.57	0.56	0.66	0.64

Final Ratio

You must enter the number of teeth of front and rear sprocket that you have mounted.

Brake Setting

In the karts that have both front and rear brakes, enter the distribution that is being used by moving the bar until the corresponding values are read.

For the karts with only the rear brake move the bar to the right 100% rear
For karts with only front brake move the bar to the left 100% front

Run Conditions

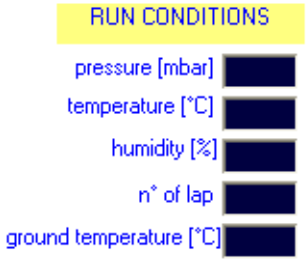

To have the maximum precision in the analysis of your session, you can enter the weather conditions (pressure, temperature, humidity), the number of laps that you've made in the session (if you've made more of 15 laps, enter 15), and the ground temperature (if you don't have the instrument to measure this, don't worry you can enter the air temperature +5 °C if there is cloud, or the air temperature + 10°C if there is sun)

DATA ACQUISITION

When you click the respective button you get the following screen:

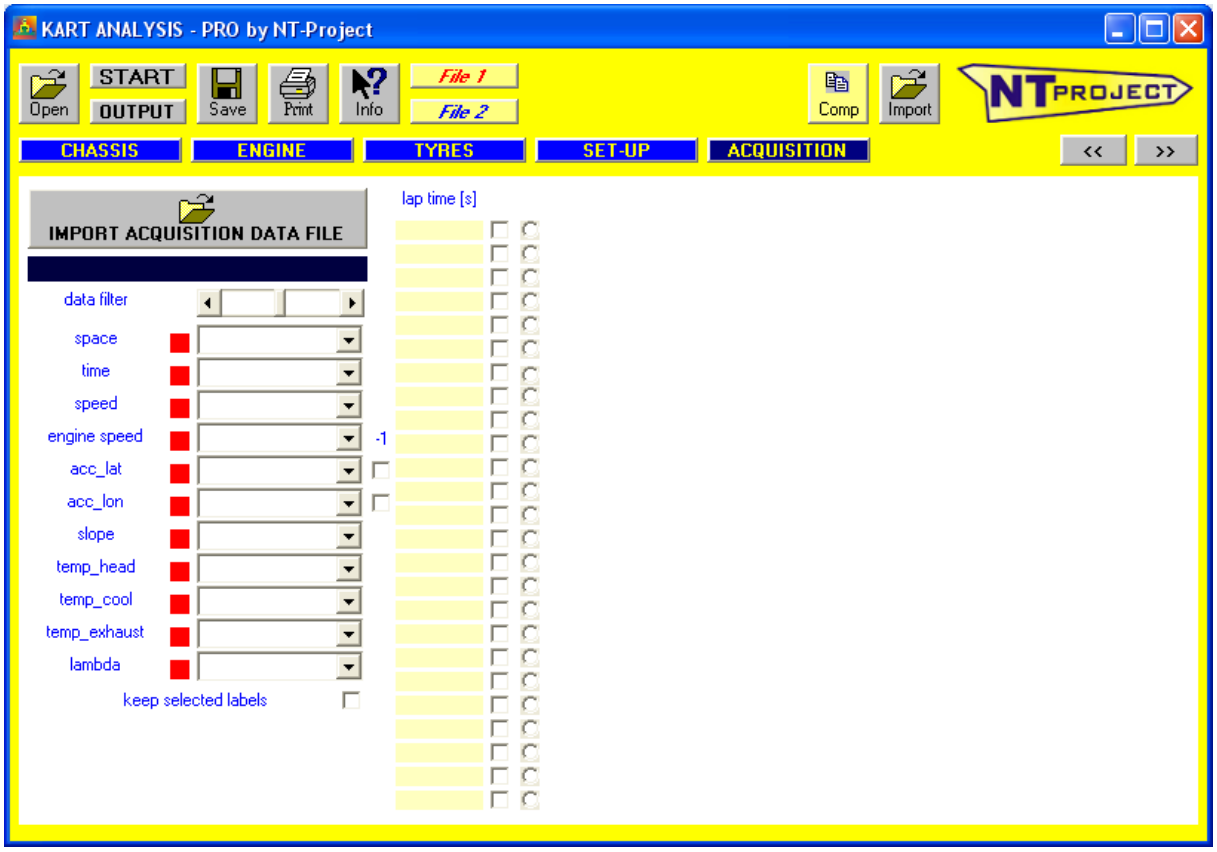

IMPORT DATA ACQUISITION FILE

For first by your acquisition data software, you must open the run that you want to analyze, and export it to a file in * .csv format, at this point on this screen of the software by clicking the "IMPORT FILE DATA ACQUISITION" button you can load the file * .csv that you've exported.

The software recognizes automatically your acquisition system, and if you've the default name for the channels necessary to make the analysis, you'll see the corresponding squares of color green, if instead you've different names for some channels, you'll have the square red, in this case from the list beside, you must simply select the right name of your channel for the specific quantity.

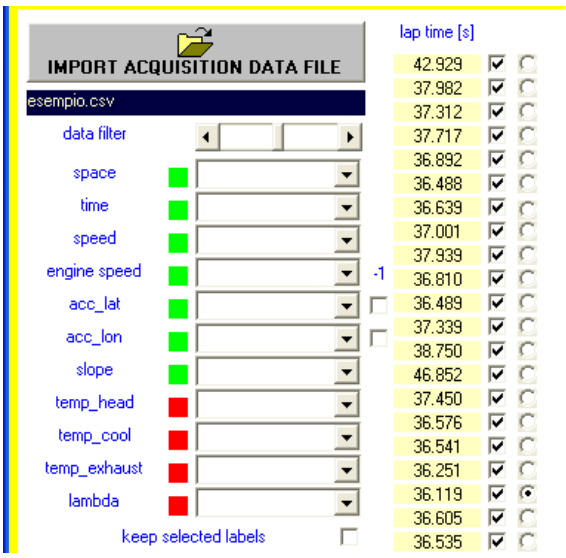

If you want keep the channel name selected you must simply check the box (keep selected labels)

The data export to have a good comprimise between precision and speed calculation should be 10 hz, if your acquisition software exports only at higher frequency to select the option below

filtro 10 hz ☑

In this area you can also select the lap that you want analyze

results

After entering the data as indicated in the previous chapter, the simulation can be started using the START button.

ANALYSIS				
	MAX POWER			
ENGINE	50.47 CV @ 13802 rpm			
	BRAKING	TRACTION	LEFT CORNER	RIGHT CORNER
FRONT GRIP	1.21		2.23	2.28
REAR GRIP	1.28	1.08	2.20	2.31
	braking - entry	exit - traction	global	
SLIP ANGLE	-0.63 deg oversteer	1.72 deg understeer	0.55 deg understeer	
SPOOL EFFECT	7.5 % understeer	-9.3 % oversteer	-0.9 % oversteer	

At the end of the calculation, the software first shows the behavior that the kart had in the session being considered.Thanks to these calculations you can have an immediate view of the engine performance, of the grip that the tires has been able to provide on braking, traction and corner both to the front and to the rear, and of the behavior that the kart (slip angle) has had in the various stages of driving, braking, entry corner, exit corner and acceleration. Moreover, since that the kart doesn't have the differential, the software shows how the rear axle has affected the various driving phases (spool effect).

The behavior of the kart and the spool effect come analyzed in the detail for each point of the track:

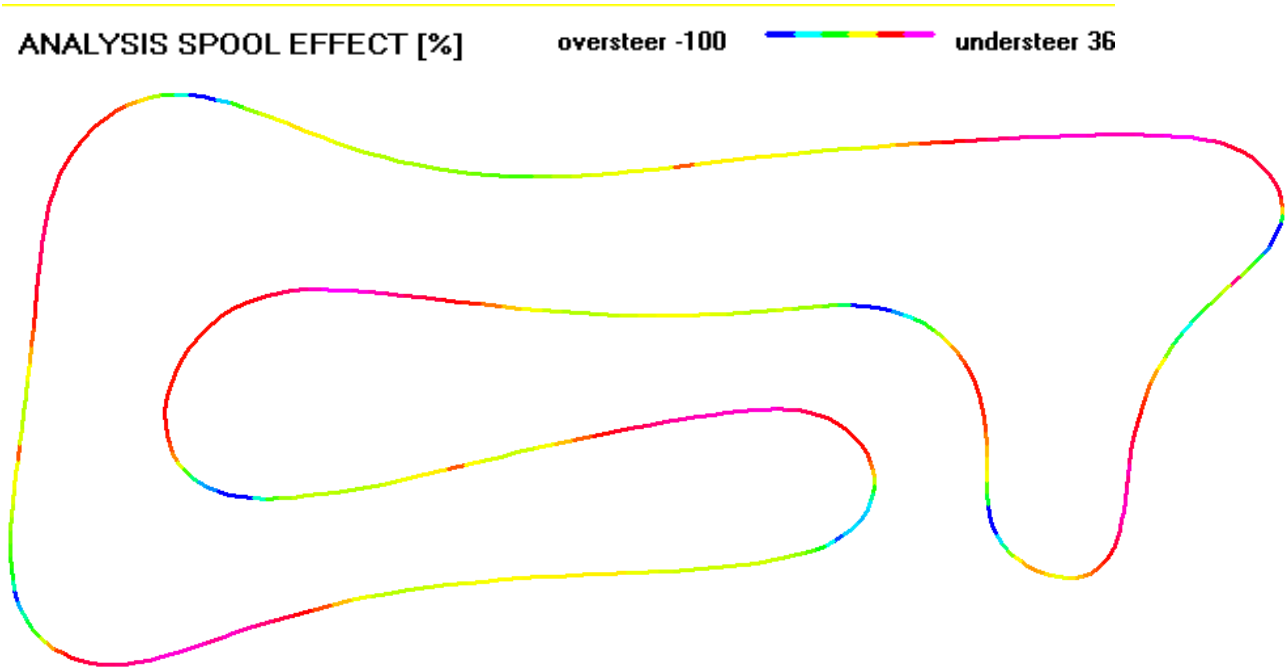

In addition to slip angle and spool effect the software allows to analyze also the force that the driver must apply on the steering wheel, and this is very important when you compare two setup to understand the least tiring for the driver above all in the race optical to have steady lap time.

Together to this the software shows the drag force due to the slip angle of the tires, and this is very useful to analyze the set-up and to see where the engine performance is limited from this above all in the category with little engine or with low power.

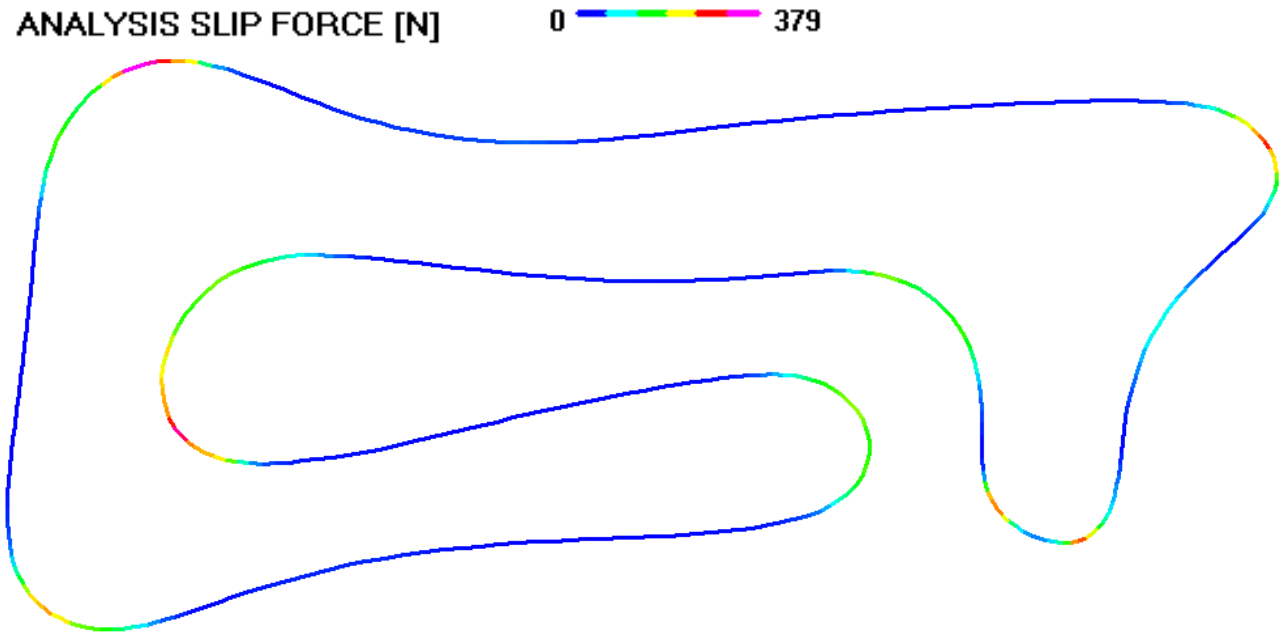

This analysis is already very important both to evaluate the performance that the kart had in every area, both to understand how to intervene on the kart and to better interpret the feelings of the driver.

SET-UP

After the analysis of the behavior of the kart the software Kart Analysis gives you clear indications on how to correct the set-up and the pressure of tires to have the maximum performance .

CAMBER L less neg. 0.42 (-0.24) R less neg. 0.42 (-0.24)	**CAMBER** The software based on the acquired data and on the characteristics of the chassis calculates the dynamic camber of the wheels during the lap and then gives you the indications to correct it and have the maximum exploitation of the tire both for what concerns the phase of braking, both for the cornering behavior.
TOE L open 0.41 (-0.41) R open 0.41 (-0.41)	**TOE** Toe is able to significantly influence the behavior of the front, therefore, depending on the driving problems that emerged from the calculations, the software shows how to intervene on this.
CASTER 20.00	**CASTER** The software then calculates the Caster value that achieves the best chassis balance in relation to the characteristics of the track and the grip conditions, providing an indication of how should be amended.
AXLE HARD 197	**AXLE** The rear axle hardness modifies the stiffness of the rear chassis and this affects the wheel load transfer, so in relation to understeering or oversteering conditions emerging from the calculations, the software indicates whether a harder or softer axle should be used.
FRONT TRACK tighten	**FRONT TRACK** The width of the front track can affect the load transfer of the front wheels therefore depending on the driving problems emerged from the calculations the software shows how to intervene on this aspect as well.

REAR TRACK enlarge	**REAR TRACK** The width of the rear track can affect the load transfer of the rear wheels therefore depending on the driving problems emerged from the calculations the software shows how to intervene on this aspect as well.
BARS front	**BARS** The bars that can be applied can change the stiffness of the chassis at the front or the rear and this changes the distribution of the load transfer, therefore in relation to understeering or oversteering conditions that emerge from the calculations the software indicates whether it is advisable to use the front bar or the rear bar.
ACKERMANN decrease L3 1 (555)	**ACKERMANN** Depending on track characteristics and driver style, the software calculates how to optimize ackermann to improve the driving.
BRAKE front 57 rear 43	**BRAKE** In the kart where it is possible to handle the brake distribution between front and rear it is important to find the right balance to obtain the optimum braking, this value changes from track to track and according to the grip conditions, so the software based on the calculations made locates the value that guarantees the best braking.
TYRES PRESSURE FL 0.82 FR 0.72 RL 0.82 RR 0.75	**TYRE PRESSURE** Finally, the software calculates the optimum pressure to be used for tires, in fact each tire provides the maximum grip performance with a certain deflection and this is linked at the pressures and at the loads on the wheels which occur during the lap.

The software shows three indications of SET-UP modifications, one to optimize globally the kart behaviour, one instead that allows to improve the brake phase and the corner entry, and one instead to improve exclusively the corner exit and the traction of the kart. The choice between the three setup will be oriented in fucntion of the needs that the driver complains at the run ending.

SET-UP	braking - entry	exit - traction	global
CAMBER			
L	-0.66	less neg. 0.81 (0.15)	less neg. 0.56 (-0.10)
R	-0.66	less neg. 0.81 (0.15)	less neg. 0.56 (-0.10)
TOE			
L	0.00	open 0.76 (-0.76)	open 0.53 (-0.53)
R	0.00	open 0.76 (-0.76)	open 0.53 (-0.53)
CASTER	20.00	20.00	20.00
AXLE	HARD 197	HARD 197	HARD 197
FRONT TRACK	tighten		
REAR TRACK	enlarge		
BARS	front		
ACKERMANN	L3 556	decrease L3 3 (553)	decrease L3 2 (554)

BRAKE	front	58	rear	42				
TYRES PRESSURE	FL	0.81	FR	0.72	RL	0.82	RR	0.75

In addition at these results, the software KART ANALYSIS calculates also how the tire pressure must be adjusted to have the best behavior of the tire in different situations of temperature and numbers of lap to make.

Calculates the pressure to have the best behavior immediately in the first laps (first lap), and these values must be used for example in qualifying or in the race when you need to make an aggressive start.

The software then calculates the pressure that should be used instead if you want to have an optimal behavior in the last laps of the run (last lap).

Finally calculate the tradeoff for having the best average behavior during all the run (average).

In addition to these results, the software provides indications for using the tire pressure to improve the driver feeling when warn oversteer or understeer. If the driver feels oversteer and you can't resolve the problem acting on the frame setup, you can use the pressure indicated in the row oversteering, viceversa if the driver feels understeer you can use the pressure in row understeering.

	Advised Pressure [bar]			
BEST LAP	FL	FR	RL	RR
first lap	0.86	0.61	1.07	0.84
last lap	0.75	0.51	0.87	0.67
average	0.78	0.53	0.93	0.72
oversteering	0.92	0.67	1.02	0.79
understeering	0.81	0.56	1.13	0.90

In addition to the main results for the fine tuning of the chassis and of the tires the software Kart Analysis in a few seconds also performs the the calculation of all the significant variables in order to assess the behavior of the chassis and of the tires.

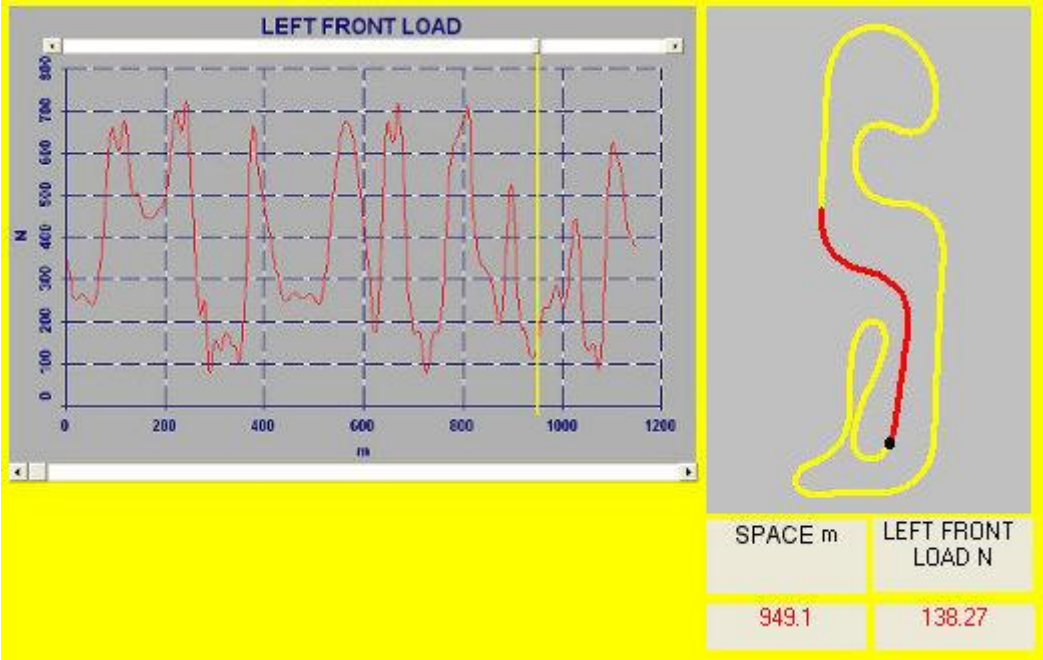

KART SLIP ANGLE
SIDE SLIP ANGLE
REAL STEERING ANGLE
STEERING ERROR
YAW TORQUE
WHEELS LOAD
DYNAMIC CAMBER
WHEELS LIFT
LONGITUDINAL FORCES
LATERAL FORCES
WHEELS SLIP RATIO
WHEELS SLIP ANGLE
FRONT ELLIPSE FRICTION
REAR ELLIPSE FRICTION
GEAR
POWER
TIRES TEMPERATURE

Comparison results

The software Kart Analysis also allows you to compare the behavior of the kart in two different sessions , so you can directly see the effects of any changes made on set-up and understand immediately if you are moving in the correct direction.

ANALYSIS				
	MAX POWER			
ENGINE	52.22 CV @ 13268 rpm			
	BRAKING	TRACTION	LEFT CORNER	RIGHT CORNER
FRONT GRIP	1.46		2.44	2.42
REAR GRIP	1.90	1.10	2.02	2.19
	braking - entry	exit - traction		global
SLIP ANGLE	-1.47 deg oversteer	1.54 deg understeer		0.35 deg understeer
SPOOL EFFECT	6.9 % understeer	-12.6 % oversteer		-4.9 % oversteer

	MAX POWER			
ENGINE	56.62 CV @ 13428 rpm			
	BRAKING	TRACTION	LEFT CORNER	RIGHT CORNER
FRONT GRIP	1.35		2.17	2.36
REAR GRIP	1.44	1.14	2.05	1.99
	braking - entry	exit - traction		global
SLIP ANGLE	-2.65 deg oversteer	1.28 deg understeer		-0.26 deg oversteer
SPOOL EFFECT	7.6 % understeer	-12.0 % oversteer		-4.3 % oversteer

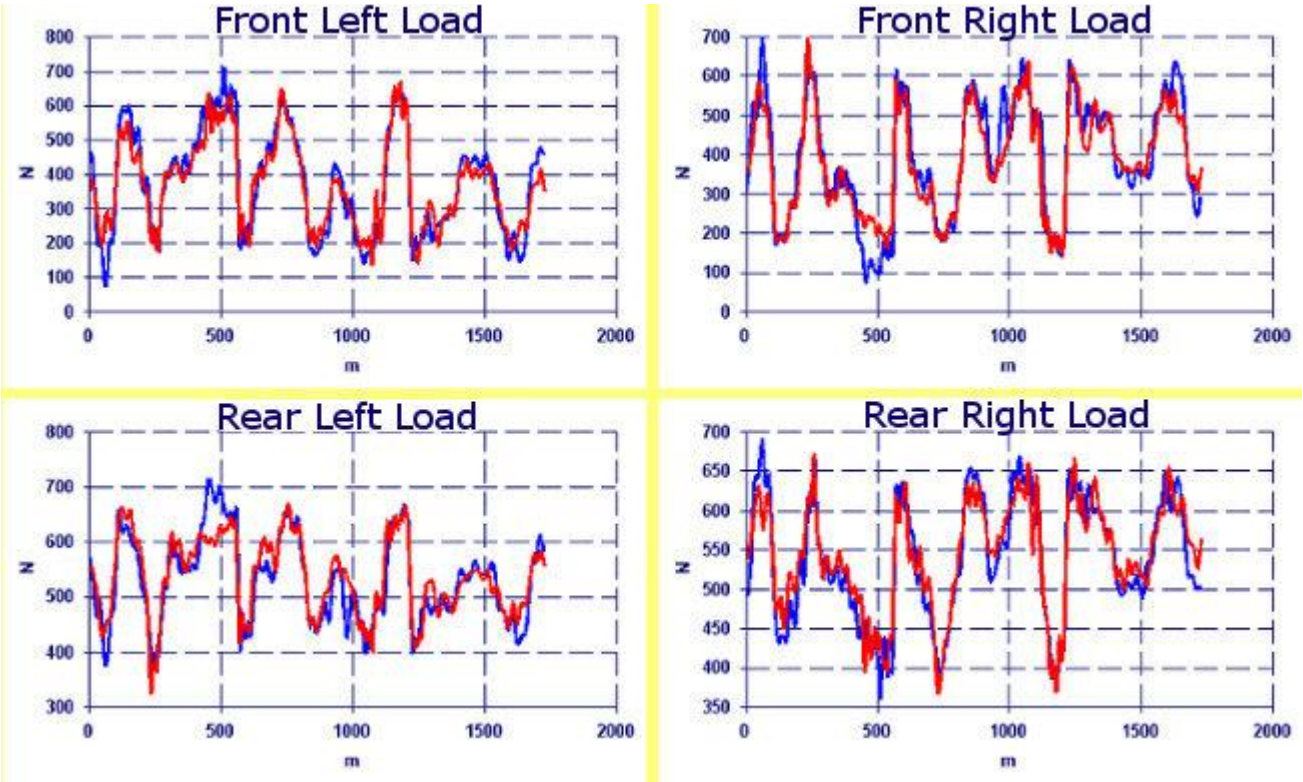

SET-UP		
CAMBER		CAMBER
L	-0.64 deg | -2.8 mm -> tighten down 2.4 mm	-0.60 deg | -2.7 mm -> tighten down 2.2 mm
R	-0.46 deg | -2.0 mm -> tighten down 2.4 mm	-0.38 deg | -1.7 mm -> tighten down 2.2 mm
CASTER	increase 1.51 deg -> 1.51 deg	increase 1.82 deg -> 6.22 deg
ACKERMANN	decrease -0.35 deg -> L3 558 mm	increase 0.26 deg -> L3 554 mm
TOE	close 2 mm -> L 0 mm R 0 mm	open -1 mm -> L -3 mm R -3 mm
FRONT TRACK	enlarge 3 mm -> 1243 mm	tighten -2 mm -> 1238 mm
REAR TRACK	tighten -3 mm -> 1394 mm	enlarge 2 mm -> 1399 mm
AXLE	harder	harder
BARS	front	front
BRAKE	front 61 % rear 39 %	front 56 % rear 44 %
TYRES PRESSURE	FL 0.65 bar FR 0.57 bar	FL 0.61 bar FR 0.55 bar
	RL 0.94 bar RR 0.70 bar	RL 0.92 bar RR 0.70 bar
ECCENTRIC	L R	L R
	up 7 13	up 10 10
	down 5 15	down 1 19

As you have seen in this brief presentation **the software Kart Analysis allows you to really exploit your acquisition data** .

In fact, thanks to this software the data collected from your data acquisition can be used for **let you see directly how are working your kart, calculating all the values significant to understand the behavior of the chassis and of the tires** .

With **Kart Analysis you can have all the answers that you need to intervene on the set-up in the correct direction, and the analysis of the data acquired will become easy and fast** , giving you a lot more large support compared to what that you can have reading directly the data from your acquisition.